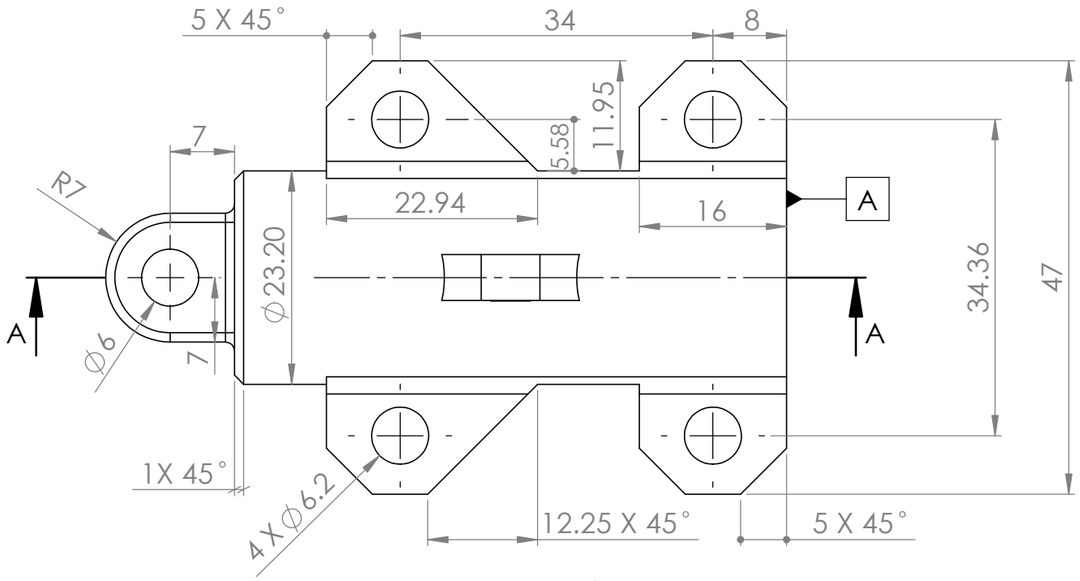

Front View

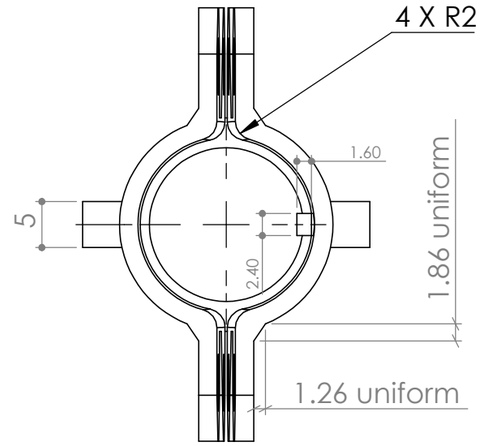

Side View

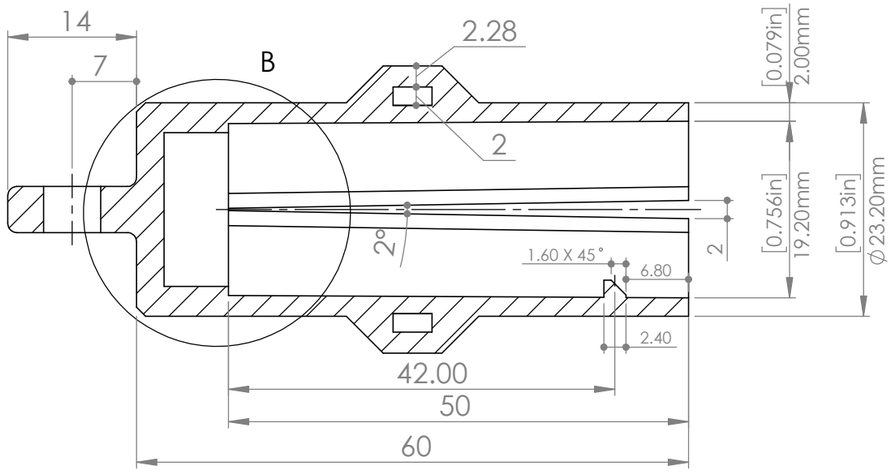

A-A

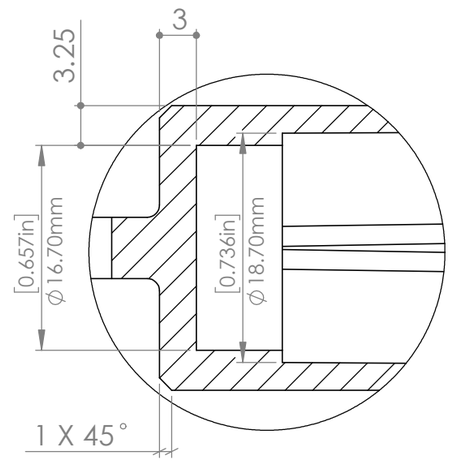

DETAIL B

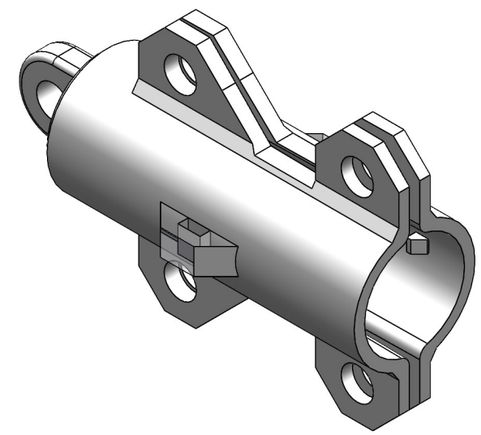

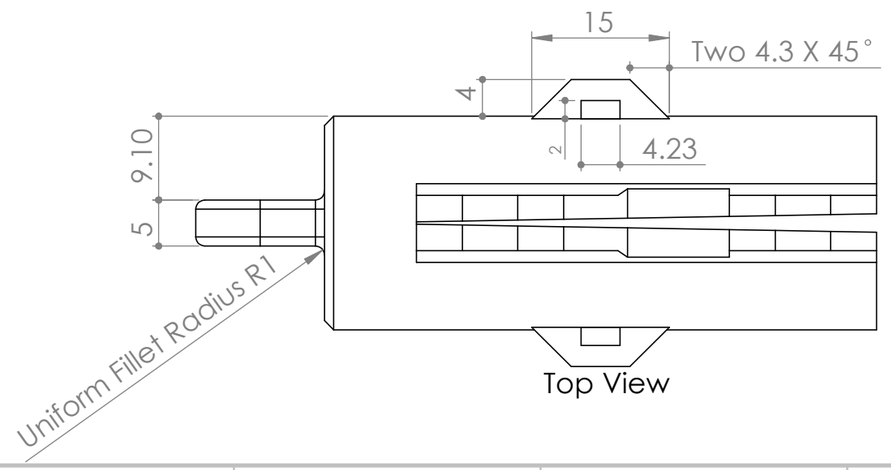

Top View

ALL DIMENSIONS ARE IN mm UNLESS OTHERWISE SPECIFIED

	NAME	SIGNATURE	DATE
DRAWN	Anuj		03/28/2023
CHK'D	Anuj/Tony		03/28/2023
APPV'D	Simon		03/28/2023
MFG			
Q.A			

TITLE:

Design of Joint Unit for The Frame Structure of Supermilage Car

MATERIAL: Ti-6Al-4V

WEIGHT: ~59 g

DWG NO. Final_Design

A3

SCALE:2:1

SHEET 1 OF 1

SOLIDWORKS Educational Product. For Instructional Use Only.